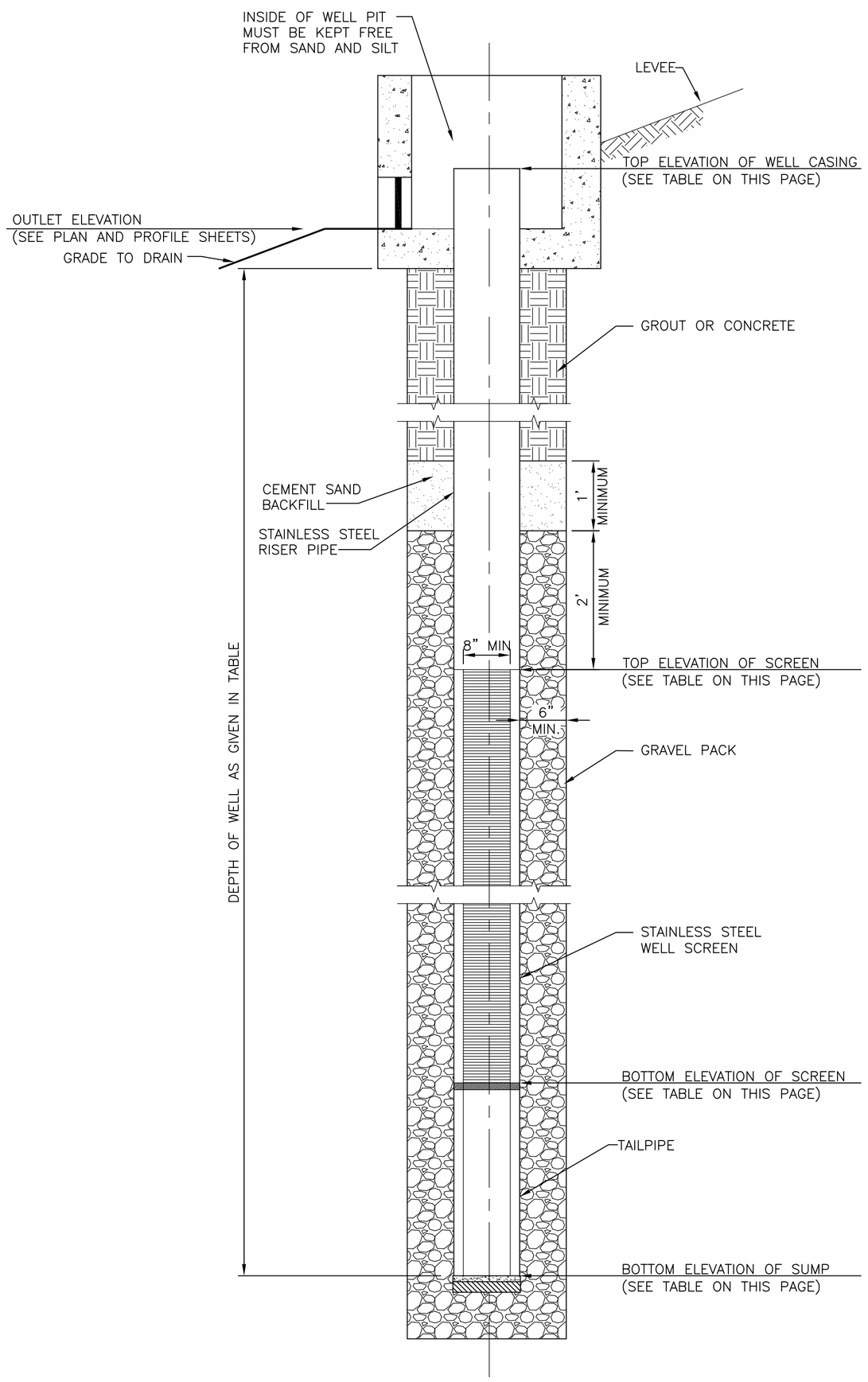

TYPICAL SECTION THROUGH RELIEF WELL

NO SCALE

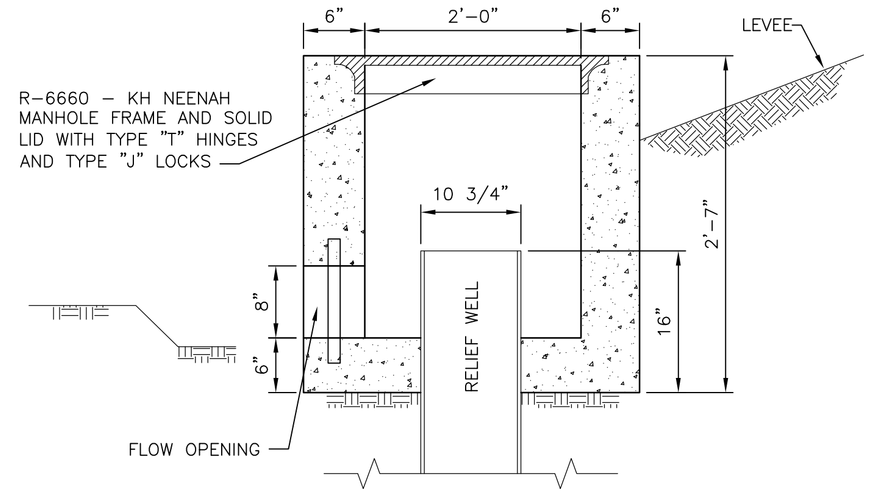

SECTION A–A

NO SCALE

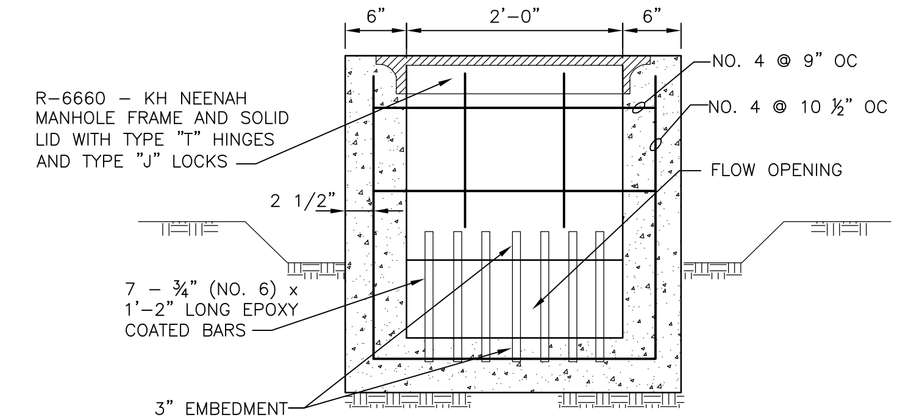

SECTION B–B

NO SCALE

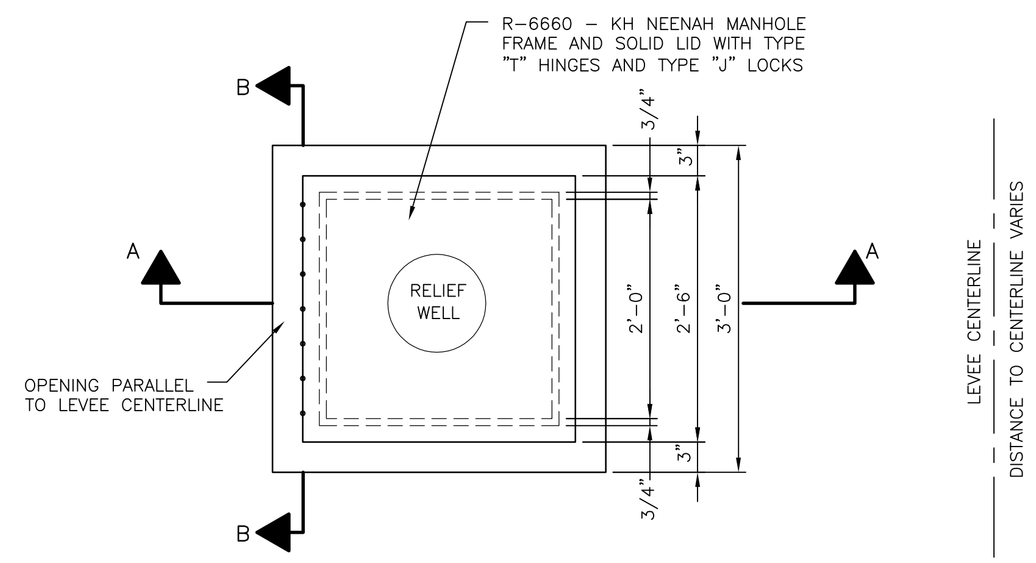

NOTE: DIMENSIONS APPLY TO ALL SIDES

CONCRETE WELL PIT PLAN

NO SCALE

AREA A1

Well No.	M.P.	Northing	Easting	Elev. Top of Well Casing, ft	Elev. Top of Screen, ft	Elev. Bottom Of Screen, ft	Bottom Elev. Of Sump, ft	Well Discharge, gpm	Comments
AR-15	5.67	11552.44	11746.01	977.5	961.3	936.3	931.3	124	
AR-14	5.66	11557.46	11675.15	977.5	960.8	935.8	930.8	124	
AR-13	5.65	11560.44	11624.98	978.0	964.4	939.4	934.4	71	
AR-12	5.64	11566.44	11546.48	979.5	962.1	937.1	932.1	120	
AR-11	5.62	11575.42	11446.21	982.0	962.2	937.2	932.2	146	
AR-10	5.60	11582.00	11354.04	981.5	959.8	934.8	929.8	128	
AR-9	5.58	11585.91	11212.33	981.2	960.0	935.0	930.0	132	
AR-8	5.54	11585.41	11061.79	981.3	967.4	942.4	937.4	68	
AR-7	5.52	11555.13	10978.75	980.0	967.8	942.8	937.8	56	
AR-6	5.50	11467.17	10935.49	980.7	968.1	943.1	938.1	56	
AR-5	5.48	11373.10	10890.12	982.1	967.5	942.5	937.5	60	
AR-4	5.45	11229.13	10842.88	983.6	960.0	935.0	930.0	92	
AR-3	5.42	11133.43	10763.85	982.1	960.2	935.2	930.2	70	

AREA C1

Well No.	M.P.	Northing	Easting	Elev. Top of Well Casing, ft	Elev. Top of Screen, ft	Elev. Bottom Of Screen, ft	Bottom Elev. Of Sump, ft	Well Discharge, gpm	Comments
CR-4	3.34	472256.77	979502.20	981.1	960.0	935.0	930.0	82	
CR-3	3.32	472243.61	979418.69	981.0	959.0	934.6	929.6	88	
CR-2	3.30	472229..30	979319.46	980.8	959.8	934.8	929.8	88	
CR-1	3.28	472212.41	979206.97	984.0	961.5	936.5	931.5	80	

HDR

HDR Engineering, Inc.

ISSUE	DATE	DESCRIPTION
A	5/21/2010	ISSUED FOR BIDS

PROJECT MANAGER	C. KOENIG
PROJECT NUMBER	137256

City of Council Bluffs
Missouri River Levee Relief Wells
Project No. FY 11-07

Council Bluffs — Iowa

RELIEF WELL DETAILS AND SCHEDULES

0 1" 2"

FILENAME

SCALE NO SCALE

SHEET **G001**

C:\pwworking\omaf\d0527031\G001.dwg, Plot, 5/20/2010 12:29:41 PM, spotter